Approximate dimensions (for UL version) ①

E4, withdrawable with horizontal rear terminals
4 pole (100% neutral)

00.00 / 00.00 Inches [Millimeters]

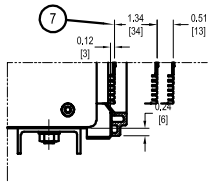

PART. "Z"

TOP VIEW

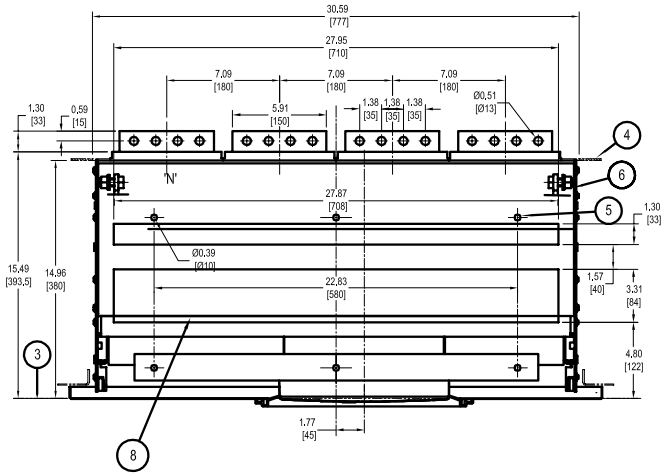

E4 4P DRAW-OUT VERSION
HORIZONTAL REAR TERMINALS
E4 - A / FULL SIZE

CAPTION

1 - PANEL DOOR DRILLING TEMPLATE
2 - No 2 HOLES FOR IP54 PROTECTION
3 - DOOR PANEL INSIDE SURFACE
4 - PROTECTION (IF PROVIDED)
5 - CRADLE FASTENING HOLES (6 x M8)
6 - EARTHING TERMINAL (2 x M12)
7 - CONNECTED, TEST, DISCONNECTED DISTANCES
8 - VENTILATION DRILLING TEMPLATE ON C.B. SUPPORT ON SWITCHBOARD

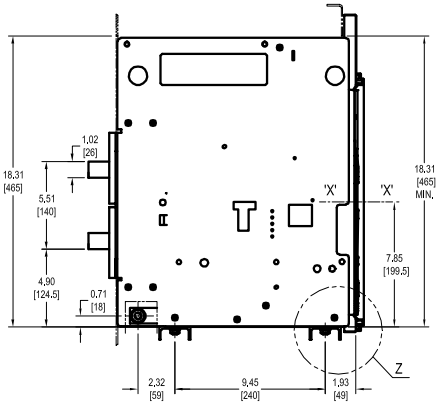

SIDE VIEW

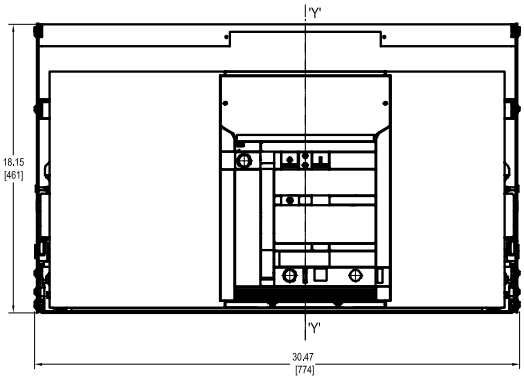

FRONT VIEW

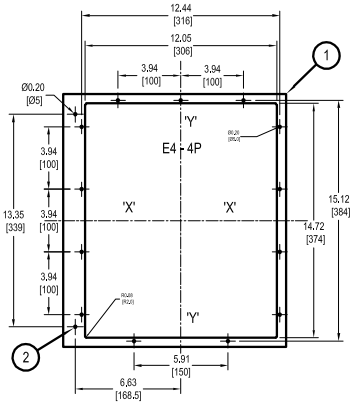

HANDLE
DOOR CUTOUT

16

① For IEC dimensions, see Emax technical catalog 1SDC200005D0201 available for download at: http://www.abb-control.com/pdf/catalog/1SDC200005D0201.pdf