Contact plan example

ABB

Special Cam Switches, Contact plan

Type _____

Project number _____

Customer´s number 5375175 - 0

Company Company Ltd.

Quantity: 3 pcs

Phone/Fax nr. 010 22 4000

Handled by: M. Smith

Name Mr. Smith

Date: 21. 3. 2000

- Interconnection between contacts
- X Contact closed
- X Contact closed between positions
- X Early make/Late break (at least 60° between steps)
- Automatic spring return (step max 60°)

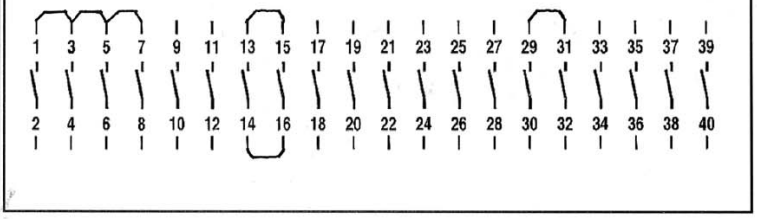

		ON_M								OM								ON			
		1	3	5	7	9	11	13	15	17	19	21	23	25	27	29	31	33	35	37	39
		2	4	6	8	10	12	14	16	18	20	22	24	26	28	30	32	34	36	38	40
0	270°	X				X		X		X				X		X					
Man.	0°		X			X		X			X				X	X					
Aut.	90°			X								X			X						
Test.	180°				X		X		X				X		X		X				

Door mounting

OM, Miniature ☐
ON, Normal ☒

Handle:
Black B ☐
Grey G ☐
Key operated ☒

Additional lettering plate: Drive 1

Front plate

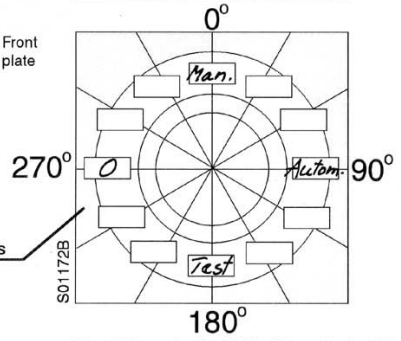

Max 20 contacts (ON),16 contacts (OM)
[Max 6 (7) Letters]

DIN-rail mounting

ON_M, Modular ☐

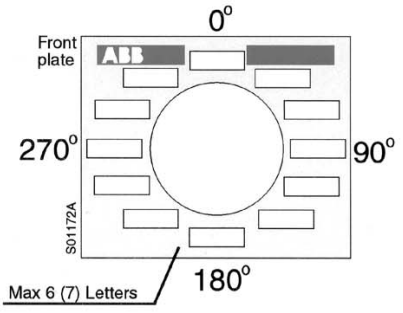

Max 3 chambers = 6 contacts
[Max 6 (7) Letters]

ABB Inc.