Approximate dimensions
S4 Fixed version, front

00.00 / 00.00 Inches [Millimeters]

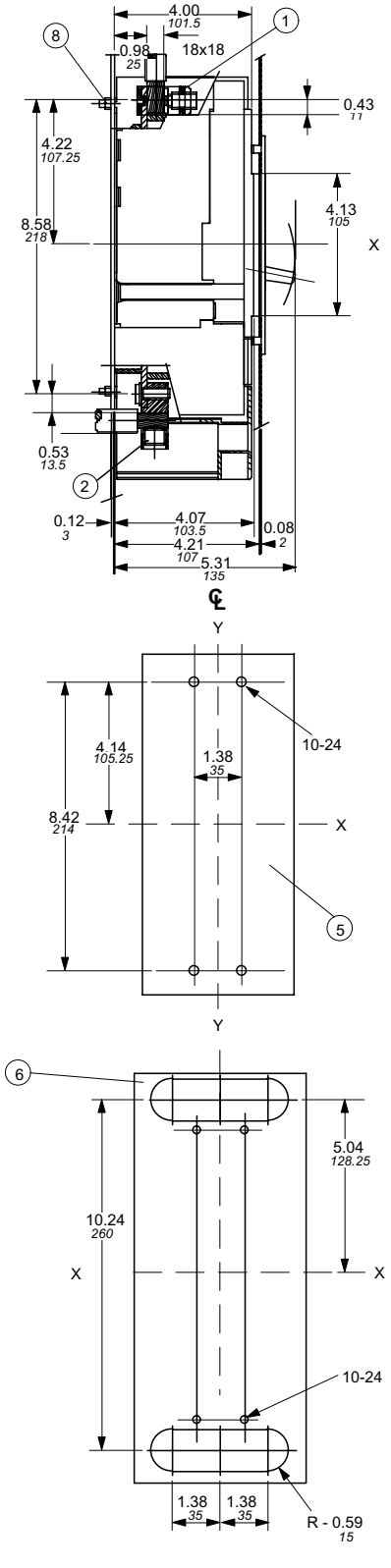

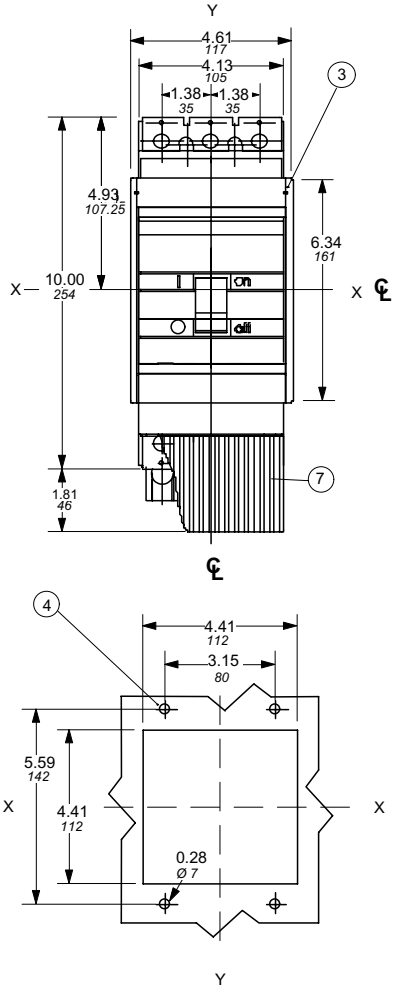

LEGEND

1-FRONT TERMINALS FOR CABLE CONNECTION
2-REAR TERMINALS FOR CABLE CONNECTION
3-FLANGE FOR THE COMPARTMENT DOOR
4-COMPARTMENT DOOR SHEET STEEL DRILLING FOR FIXING THE FLANGE
5-MOUNTING ON SHEET STEEL
6-MOUNTING ON SHEET STEEL REAR CABLE TERMINALS
7-HIGH TERMINAL COVERS WITH IP 20 PROTECTION DEGREE
8-TIGHTENING TORQUE 17.70 lb-in

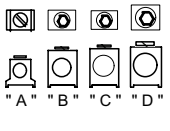

FIGURE	LUG KIT CAT. NO.	LUG NO.	TEMP.	WIRE RANGE	WIRE TORQUE	MOUNTING TORQUE	WIRE SCREW SIZE
A	K4TB, K4TB-2	D3447	75° C	14AWG - 1/0	50 lb-in	120 lb-in	SLOT
B	K4TC, K4TC-2	D3449	75° C	2AWG - 4/0	120 lb-in	150 lb-in	3/16
C	K4TD, K4TD-2	D3448	75° C	4AWG - 300 kcmil	275 lb-in	150 lb-in	1/4
D	K4TE, K4TE-2	D3472	75° C	6AWG - 350kcmil	275 lb-in	150 lb-in	5/16