# Approximate dimensions
## S5 Fixed version, front

00.00 Inches
00.00 [Millimeters]

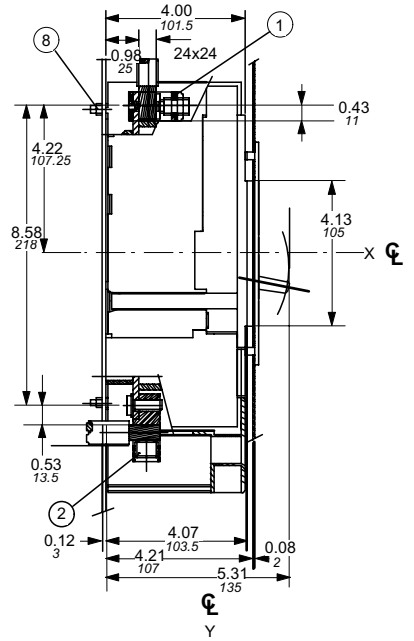


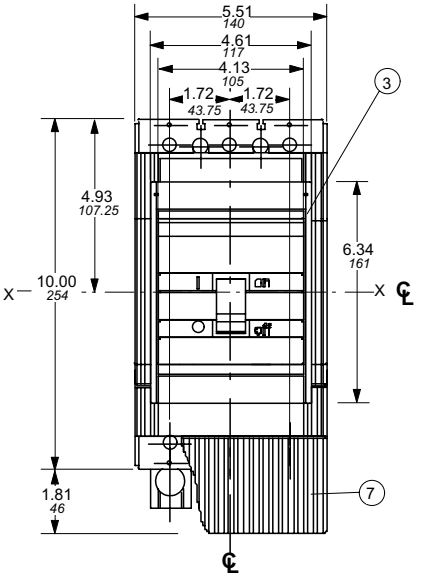


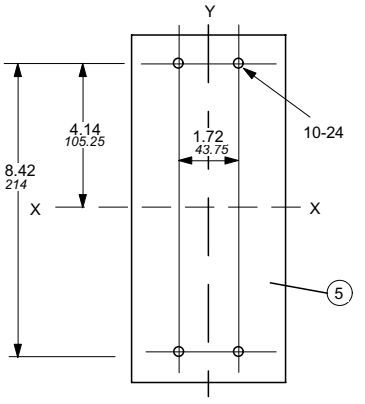


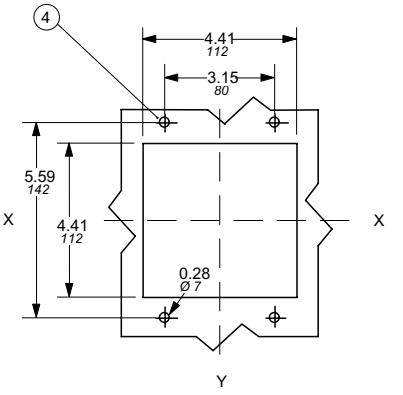


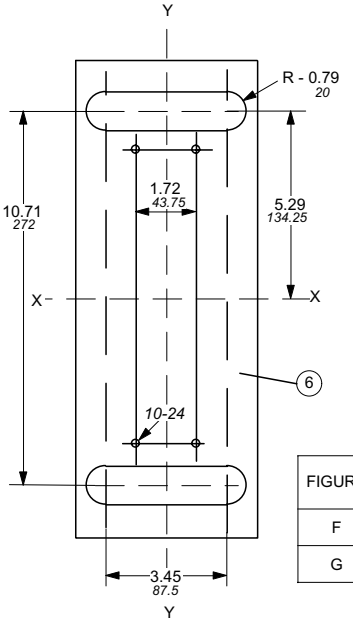


LEGEND

1-FRONT TERMINALS FOR CABLE CONNECTION
2-REAR TERMINALS FOR CABLE CONNECTION
3-FLANGE FOR THE COMPARTMENT DOOR
4-COMPARTMENT DOOR SHEET STEEL DRILLING FOR FIXING THE FLANGE
5-MOUNTING ON SHEET STEEL
6-MOUNTING ON SHEET STEEL REAR CABLE TERMINALS
7-HIGH TERMINAL COVERS WITH IP 20 PROTECTION DEGREE
8-TIGHTENING TORQUE 17.70 lb-in

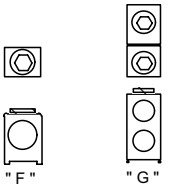


| FIGURE | LUG KIT CAT. NO. | LUG NO. | TEMP. | WIRE RANGE | WIRE TORQUE | MOUNTING TORQUE | WIRE SCREW SIZE |
|---|---|---|---|---|---|---|---|
| F | K5TF, K5TF-2 | D3450 | 75° C | 250 - 500 kcmil | 375 lb-in | 175 lb-in | 3/8 |
| G | K5TG, K5TG-2 | D3484 | 75° C | 3/0 - 250 kcmil (2) | 275 lb-in | 175 lb-in | 5/16 |