Approximate dimensions (for UL version)

E1, fixed with horizontal rear terminals
3 pole
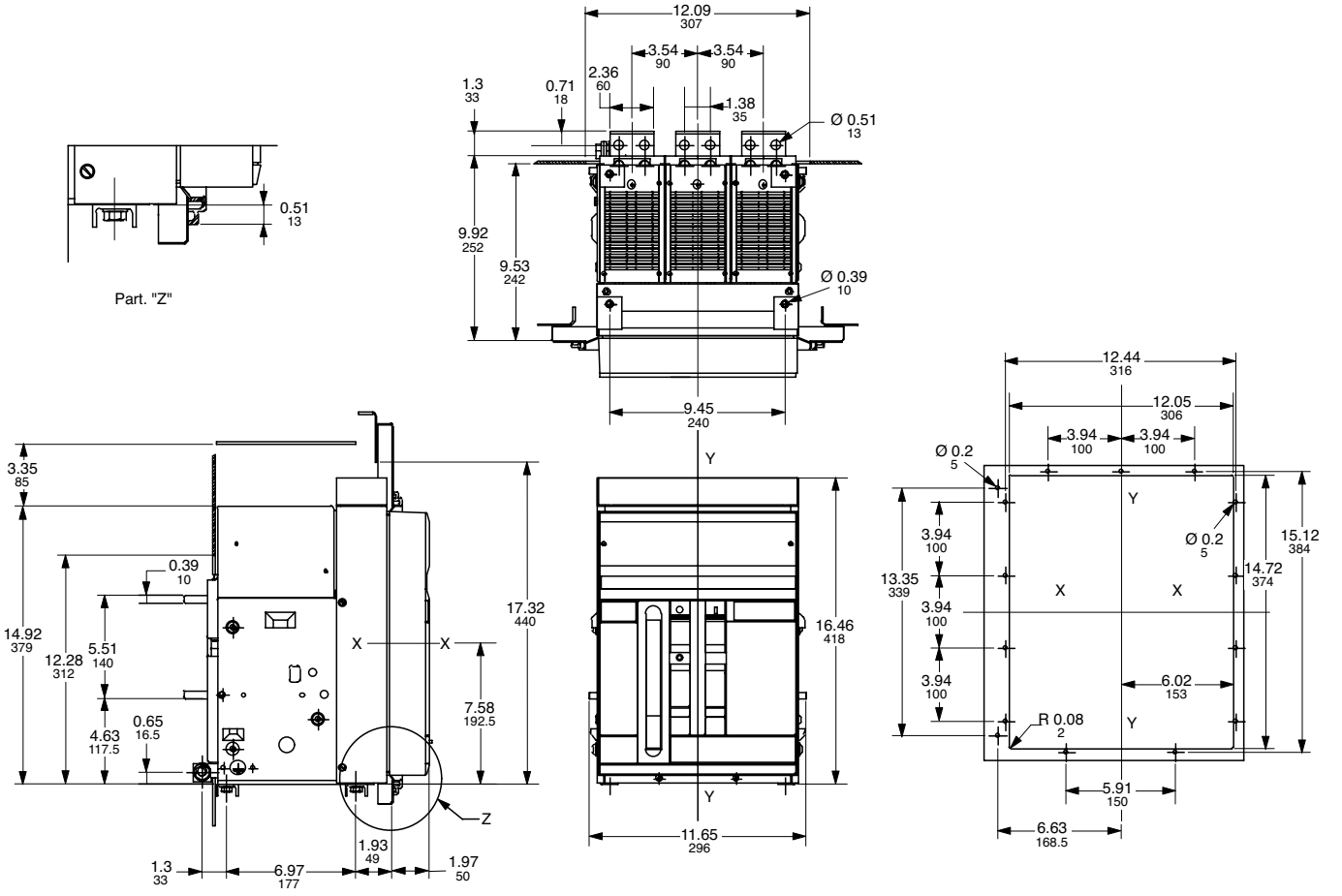
00.00 / 00.00 Inches [Millimeters]