Approximate dimensions (for UL version)

E3, withdrawable with horizontal rear terminals
3 pole

00.00 Inches
00.00 [Millimeters]

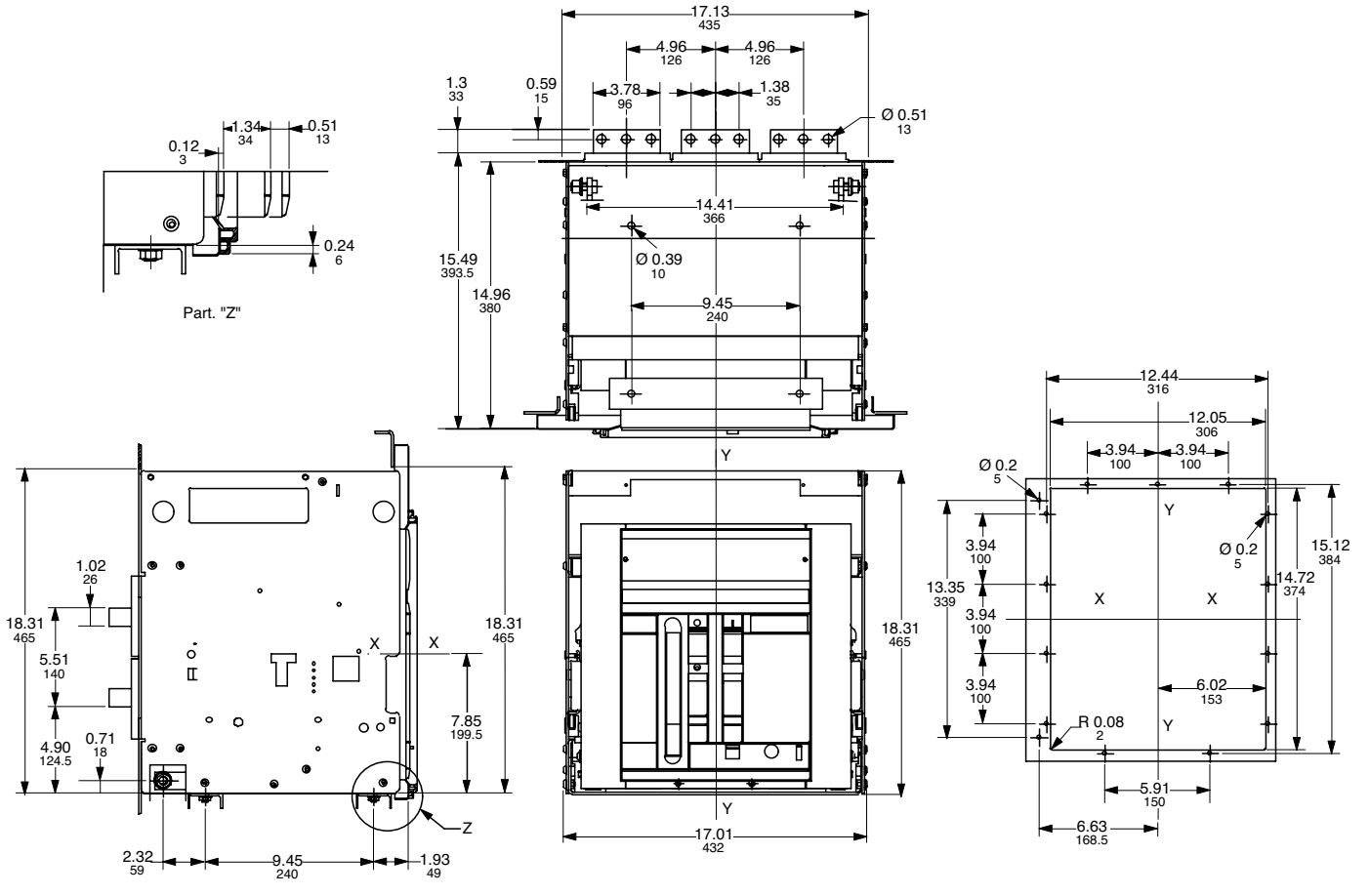

16