Approximate dimensions (for UL version)

E3, withdrawable with horizontal rear terminals
4 pole

00.00 / 00.00 Inches [Millimeters]

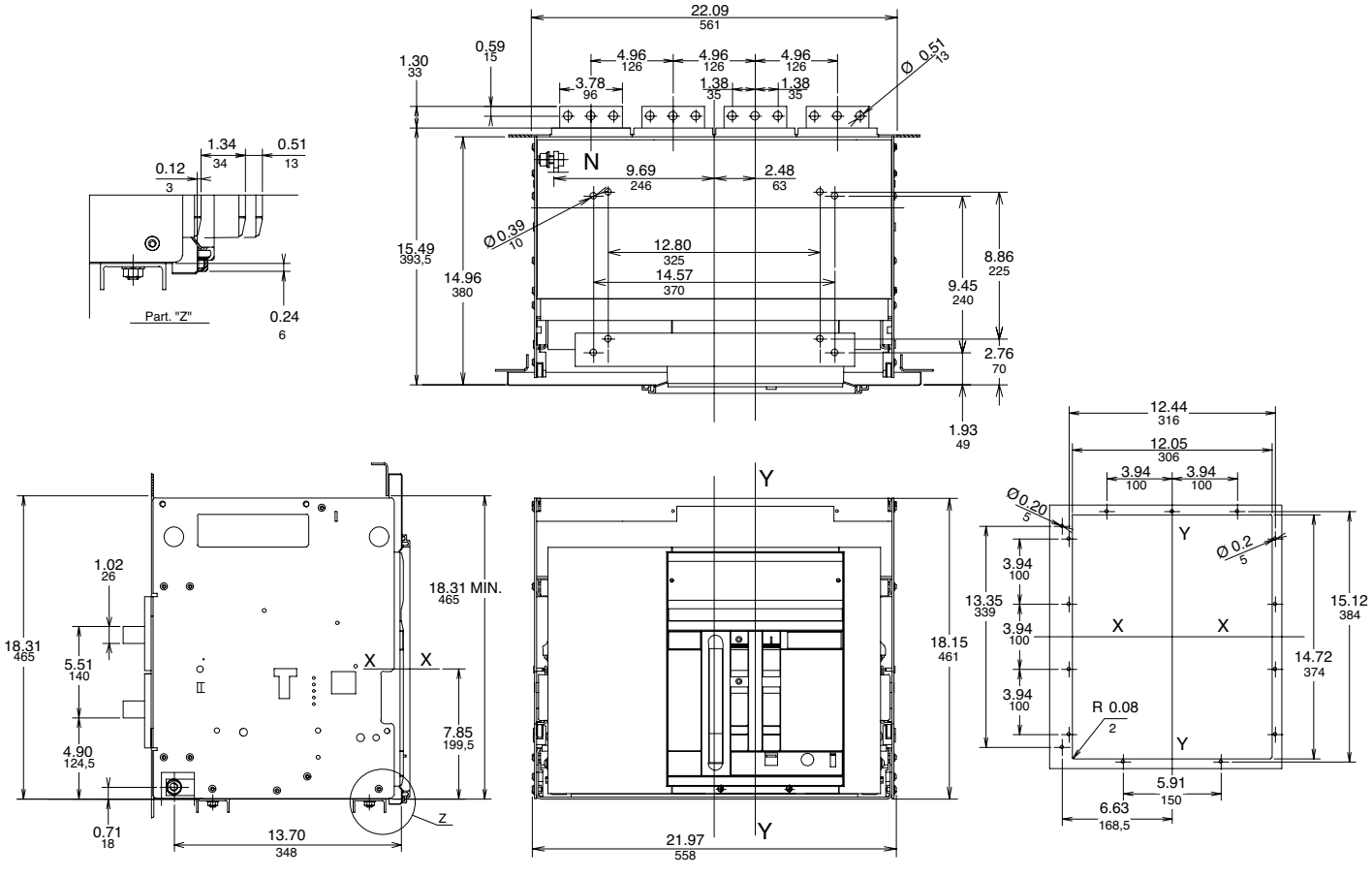

16