General information

Modular construction ①

Modular switch construction allows the operating mechanism to be placed at either end of the switch or anywhere in-between, 125A – 3150A.

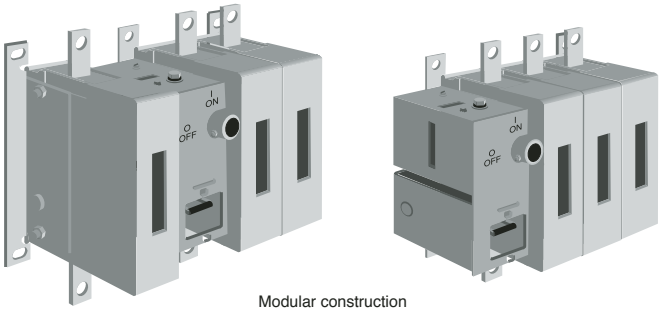

Modular construction

Finger proof

Dead-front construction plus terminal shrouds reduce the risk of touching live parts, improving the safety and reliability of the installation.

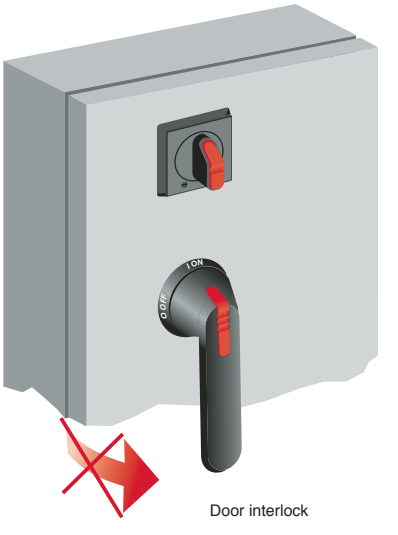

Door interlock

Door interlock

The handle and shaft provide a door interlock; the door can not be opened when the switch is in the “ON” position. NOTE: Some handles provide a method for qualified personnel to circumvent the door interlock. This is commonly referred to as a “defeater” mechanism.

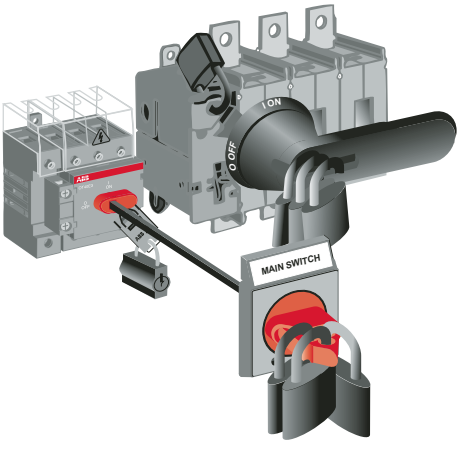

Handle and mechanism padlocked OFF

Padlockable

Handles can be padlocked in the “OFF” position with up to three padlocks: Additionally, the switch mechanism can be directly padlocked in the “OFF” position when the door is open. NOTE: Some handles can be ordered with the ability to padlock in both the “ON” & “OFF” positions, please consult your ABB sales office.

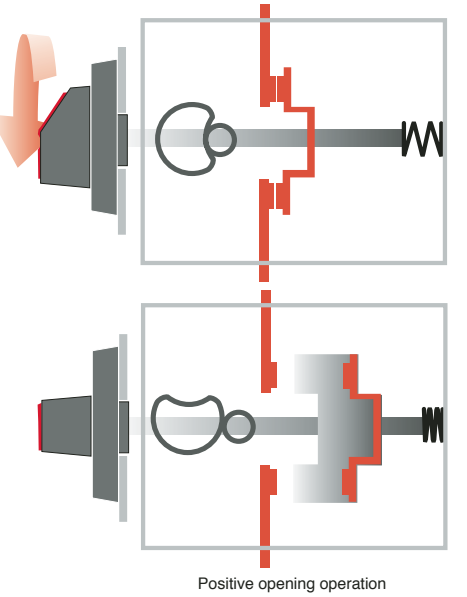

Positive opening operation

Positive opening operation

All switches operate according to the “positive opening operation” principle. This means the contacts are opened and closed by a driven mechanism, a solid moving bridge, not merely springs. This provides reliable position indication to the user; if the switch is in the “OFF” position, the contacts are open.

① Please consult ABB sales office for additional information.